Plasmon-7,-71,-72

Table of Contents

1 Delivery set

Delivery set

- Device
- Power source (220 V AC or 100…220 V AC)
- PC connection cable
- Connection cable for subsidiary channel signal
- Installation diskettes (CD)
- Spare parts (variable set on customer's demand)

  Typical set includes:

  - F1-65 prism – 1 piece;
  - K8-50 prism – 1 piece;
  - K8-65 prism – 1 piece (for Plasmon71 only);
  - Rubber gaskets – 5 pieces;
  - Sensor chips – 20 pieces;
  - Cell – 2 pieces;
  - Immersion liquid – 1ml.

  Additional components that can be included into the set:

- If the device is completed with peristaltic pump, the following components are included in the set:
  - Peristaltic pump Plasmon-Pump-8– 1 pieces;
  - Cable.
- If the device has a sample thermostabilization system, then one of the included cells is thermally stabilized.

Attention: Program components provided on the installation diskette are individual for your device exemplar.

2 Turning and installing

Turning on the device and installing program package

To turn on the device, connect it to free USB port of the computer and to the power source. If the facility is completed with plunger pumps, it is necessary to connect pumps to the device. Turn on the computer and the power source.

To install the program:

Insert the first diskette. Start the Setup.exe program. During the installation enter the factory device number into the **"Serial number"** field (factory number is marked on the lower surface of the load-bearing slab of the device and specified on the installation diskettes).

While starting the program first time, the **Set Device** window will appear. It is necessary to select the following options in this window:

- The port the device is connected to.
- The prism installed on the device.

Different device modifications require different set-up; to tune up, Enable the required channels.

The device is ready for operation.

3 Device description

Device description

- Design
- Optical arrangement
- Pumps
- Thermally stabilized cell

3.1 Design

Design

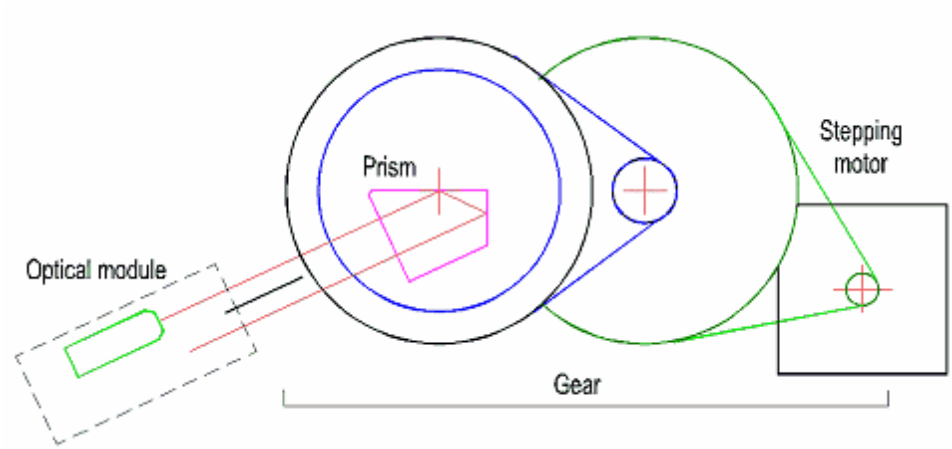

The device is built in Kretschmann geometry. The main element of the device is the retroreflecting measurement prism, which is installed on the rotating table. The right (on the figure) prism face is made reflecting, and top right angle of the prism equals to 90 degrees. During the device operation the sensor chip (a glass slide with deposited thin Au layer) is installed on the top prism face using the immersion liquid. Properly, the SPR (surface plasmon resonance) phenomenon is observed in the sensor chip. A cell intended for injection of the investigated probe is pressed to the layer. To observe the SPR phenomenon, the intensity of the polarized light reflected by the Au layer is investigated as a function of angle of incidence of light on this layer (further – angle of incidence).
The table with prism is made rotating to change the angle of incidence. The rotation is carried out on the

axis, which approximately coincides with the glass slide surface. The rotation can be realized manually using the preset ring or programmatically by the controlled precision rotation system. Precision rotation system consists of stepping motor and double-stage reducer, which outlet axis the table with prism is installed in via the friction clutch.

The maximum operational angle scanning range amounts to 17 degrees.
The operational rotation direction is in the angle of incidence increase direction.

3.2 Optical arrangement

Optical arrangement

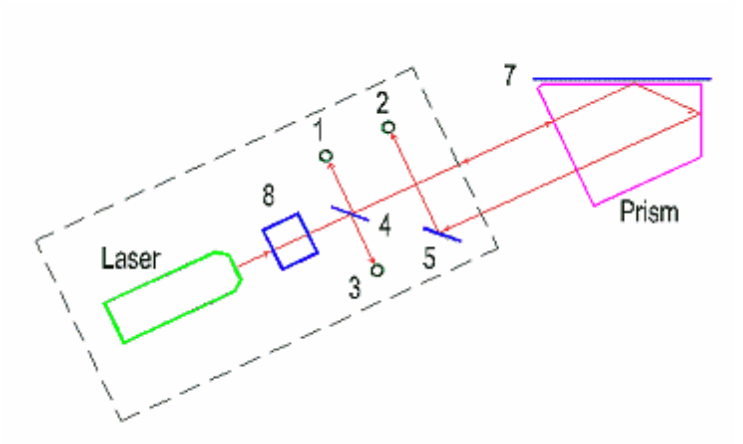

A semiconductor laser is used as a light source in the device. Polarized light of the laser is split into two beams by beam splitting means 8. These two beams provide two-channel device operation mode. Beam in the first channel falls on the measurement prism and further on the sensor chip 7, passing the transparent plate 4 that serves for take-off of the part of the beam energy on the photodiode 3 for laser power control. The point of incidence of beam on the chip coincides with the table rotation axis. The beam reflected from the chip falls on the photodiode 2 of the registration system after turning by 90-degree prism angle and turn mirror 5. The accepted optical arrangement provides design compactness and weak dependence of positions of light spot on the chip and on the registration system photodiode what is important for ensuring of accuracy of the SPR curve measurement.
The second channel arrangement differs from the first channel arrangement by absence of plate 4 and photodiodes 1 and 3.

The device allows to calculate absolute values of angle of incidence. Note that under normal incidence of light on the input prism face (the autocollimation position) angle of incidence equals to prism angle. Therefore, it is necessary to know the device autocollimation position for determination of the absolute values of angle of incidence. Photodiode 1, which the light reflected by the front prism face can fall in after reflecting from the glass plate 4, is used for determination of the autocollimation position. Maximum signal of the photodiode 1 (the calibration signal) is observed at the value of the angle near to the autocollimation. Difference of this value from the precise value (the correction) is measured by the manufacturer for every device exemplar and is stored in the file, which is included in the installation system supplied along with the device. Here positive value of the correction, e.g. 15, means that maximum calibration signal is observed when the beam reflected by the front prism face is deflected downward by 15 angular minutes relative to the autocollimation position.

The device can be completed with the following measurement prisms:

- K8-50 prism (made of K8 glass, with operating angle (angle at the top) of 50 degrees);

- F1-65 prism (made of F1 glass, with operating angle of 65 degrees).
- K8-65 prism (made of K8 glass, with operating angle of 65 degrees) for Plasmon-71 device.

Note: It is possible to find information about prisms by selecting the menu items sequentially: **Options/Options/Device**.

3.3 Pumps

Pumps

The device can be completed with Peristaltic pump Plasmon-Pump-8

The pumps are controlled programmatically and independently. These pumps can operate both in injection and exhaust modes. The operation mode is the exhaust mode. Pumps can operate in the rate range of 1…500 ul/min. Modes of rapid passage are also provided.

3.4 Thermally stabilized cell

Thermally stabilized cell

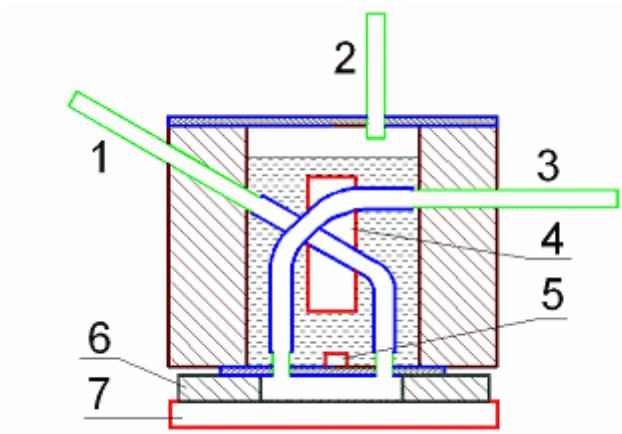

Thermally stabilized cell represents an oil-filled plastic housing with bedplate made of stainless steel. The bedplate of the cell is pressed to the perforated silicon gasket 6 that, in turn, is pressed to the sensor chip 7. Properly, perforation in the silicon gasket forms the cuvette. Investigated probe gets to the cuvette region via the input connection 1 and silicon pipe inside the housing through the hole in the bedplate. The probe is evacuated through the connection 3. Temperature sensor 5 is attached to the cuvette bedplate. Signal from the temperature sensor controls the resistive heater 4, which is situated in the oil-filled volume of the cell, using the proportional-integral-differential algorithm. Heater and temperature sensor are automatically connected to the circuit when the cell is introduced.

Since the silicon rubber is partially transparent for gases dissolved in the probe, part of these gases evolves into the oil and accumulates in the top part of the cell volume. Connection 2 is intended to pump out these gases. Probability of bubble nucleation in the active region of the cuvette decreases and reliability of obtained results increases upon decreasing the amount of dissolved gases in the probe.

4 Operating the device

Operating the device

4.1 Turning on measurement channels

Turning on measurement channels

Each device contains two optical measurement channels, which are processed by channels #1 and #2 of the electronic module, and subsidiary measurement channel, which is processed by channel #5 of the electronic module.

It is only possible to receive and process signals from the measurement channels when the corresponding channel of the electronic module is turned on. To turn on/off necessary channels, press the **Set options** button (or select the **Options/Options** menu item). In the opened window select the **Advanced Options** page and switch on/off corresponding channels (a set “flag” means that this channel is turned on).

4.2 Checking and adjusting

Checking and adjusting the device

Checking the device.

To check the device, install the selected prism and the sensor chip, and do not forget to use immersion liquid. If you work with liquids, install the cell and fill it with the required solution. Start the program and turn on the **Adjustment** mode by pressing the **Adjustment** button (or by selecting the **Tools/ Adjustment** menu item). Laser beam intensity will increase and signals of all device channels will visualize in the arisen window as horizontal color lines (even signals of the channels, unused in the current device realization). Length of the lines is proportional to corresponding signal values.

Observe the light spot on the working layer through the cell while turning table with the prism using the angle preset ring. Brightness of the spot increases noticeably at certain rotation angle that corresponds to the SPR angle. The spot must be situated inside the cuvette not far from the center (usually it is situated between the center and right edge), and it must not go out of the cuvette borders during the rotation. The beam that came out of the prism must fall on the rotary mirror 5. Observe the position of the spot of the beam that came out of the prism on the rotary mirror 5 surface while turning table with the prism using angle preset ring (see Optical arrangement). The spot position has to be changed insignificantly.

If you have found the position corresponding to the SPR angle, decrease the angle of incidence by turning the preset ring clockwise on several degrees. Start the measurement by pressing the **Single measurement** button (or by selecting the **Measurement/Single** menu item). The measurements will start. Measurement results will be represented by the curve in the opened window entitled SPR1. You have to see part of the SPR curve; moreover, maximum signal must be above the window half height, but it must not exceed its boundaries.

If all of the above mentioned is fulfilled, the device is ready for operation.

Adjusting the device.

If after Checking the device you are sure that device adjustment is wrong, you can try to rectify the situation. To do this, loosen the left screw of the optical block mount to the device plate and reach the adjustment position described in the Checking the device section by slightly turning the block. If all is set up correctly, but the signal is absent or very weak, it is possible that the working beam does not fall on the photodetector 2. In this case it is necessary to take off the lid by unfastening two screws at the bottom of the optical block and visually check whether the beam falls on the photodetector or not. The beam must fall into the center of the photodetector 2 after reflection from rotary mirror 5. If it is necessary, one can turn the support with the mirror 5 in the required direction.

Note: Displacement of any optical block elements (except the mirror 5) leads to impairment of the measurement of absolute angle values accuracy.

4.3 Changing the prism

Changing the prism

To change the prism, turn off the fixation screw of the prism table and pull out the prism (along with the table).

Install and fix the table with a new prism. Check the device as described in the Ckecking and adjusting the device section.

Note: After you change the prism or change its position you have to carry out the device Calibration before starting the measurements.

4.4 Calibration

Calibration

Calibration is the process of associating the angular sweep of the device to the built-in calibration reference point. Angular position of the reference point is located near from the position of normal incidence of light on the input prism face and it is known precisely. Calibration allows to calculate absolute values of angles of incidence to a high accuracy.

Calibration should be carried out after changing the prism or any modification of its position or simply before starting important measurements.

Set the prism in the position required by the terms of the experiment by turning the angle preset ring. Press the **Calibration** button (or select the **Tools/Calibration** menu item). The angle scanning will begin (for more detail see **Device description. Design)**. During the calibration the special mode for measurement of the reference point signal is established and the system position in the moment of the maximum reference point signal is determined. The reference point signal is drawn in the SPR1 window, and the calculated position of its maximum is shown by the vertical line and the text is outputted, e.g. Zero”=607 a.m., in the same place. It means that the angle of incidence of light on the input prism face equals to zero when the prism rotation angle equals to 607 angular minutes. The passport correction for true angular reference point position is taken into account automatically.

5 Possible problems

Possible problems

6 Connection

Connection and cables

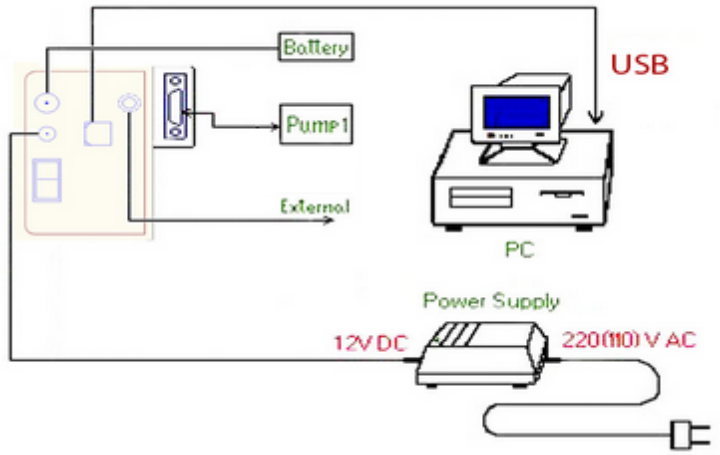

Power Connector

X2	
1	GND
2	+12V DC (central contact)

External Signal (to Subsidiary channel)

X3	
1	GND
2	external + (central contact)

Index

- C -

- D -

- E -

- I -

- O -

- P -

- S -

- T -

Endnotes 2... (after index)

Back Cover